DIMENSION SHEET - CLASS "C"
MOTORHOME (RAISED ROOF)

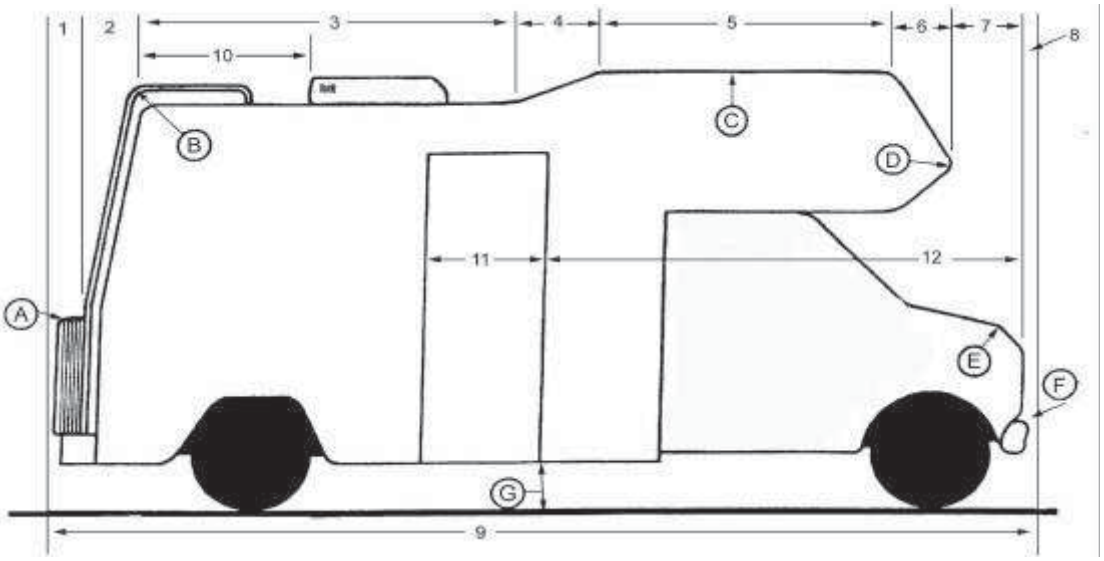

Lengths - Measured Horizontally

# 1	Rear of bumper (or spare) to ladder (or body)	_____
# 2	Rear of ladder (or body) to ladder or roof radius	_____
# 3	Ladder (or roof) radius to start of slant	_____
# 4	Start of slant to end of slant	_____
# 5	End of slant to front of roof	_____
# 6	Front of roof to tip of cab-over	_____
# 7	Tip of cab-over to front of hood	_____
# 8	Front of hood to front of bumper	_____
	Total	_____
# 9	Overall length, front to rear	_____

If you have measured correctly, the total of # 1 through # 8 should be the same as # 9.

# 10	Ladder (or roof) radius to rear of AC (or pod)	_____
# 11	Width of door	_____
# 12	Front bumper to front edge of door	_____

Heights - Measured from Ground

A	Height to top of spare	_____
B	Height to radius of roof or ladder	_____
C	Height at raised roof (point "C")	_____
D	Height to front of cab-over	_____
E	Height to top of front of hood	_____
F	Height at front bumper	_____
G	Ground Clearance	_____

Widths, Measured Side to Side at Points Shown

A	Width at point "A"	_____
B	Width at point "B"	_____
C	Width at point "C"	_____
D	Width at point "D"	_____
E	Width at point "E"	_____
F	Width at front bumper	_____

Motorhome Information

1	Do you have an awning?	_____	How far does it extend out from the side (closed) _____
	Driver or passenger side?	_____	
2	Do you have a 2nd AC or pod?	_____	Measure the distance between the two _____

YEAR _____

MAKE _____

MODEL _____

FLOOR PLAN _____ CHASSIS _____ (Chevy, Ford, etc.)

A photo of the motorhome will help us make the pattern. The photo can be returned if requested.

NAME _____

Daytime phone _____

Date of order _____

DIMS 196 (3/03)

Be sure to fill out the Motor State Distributing Custom Order Release Page.

Custom Order Release

Please be advised that in placing this order for custom manufactured merchandise you are accepting full responsibility for the correctness and accuracy of all pertinent ordering information. Further, be advised that by filling out and signing this form you are affirming the correctness and accuracy of the information contained herein and authorizing Motor State Distributing to order this custom merchandise. Once this form has been signed, the purchaser assumes full responsibility for paying for the custom merchandise and no refund will be issued unless it can be shown that any errors or defects were the fault of the manufacturer and not caused by erroneous information.

As a rule, custom orders cannot be cancelled once the order is placed with the manufacturer. All custom orders are subject to freight and handling charges from the manufacturer.

No returns will be accepted on custom-built items.

Sales Contact At Motor State _____

Customer Number _____

Company Name_____

Address _____

City _____ State _____ Zip _____

Phone _____

Fax_____

Email _____

Print Your Name _____ Date _____

Authorized Signature_____

If you are submitting this form electronically, your digital signature must be added last. Once signed, this form becomes non-editable. Please double check all items first.

Motor State Distributing
8300 Lane Drive, Watervliet MI 49098
web: www.motorstate.com | phone: 1-800-772-2678 | fax: 1-800-772-2618